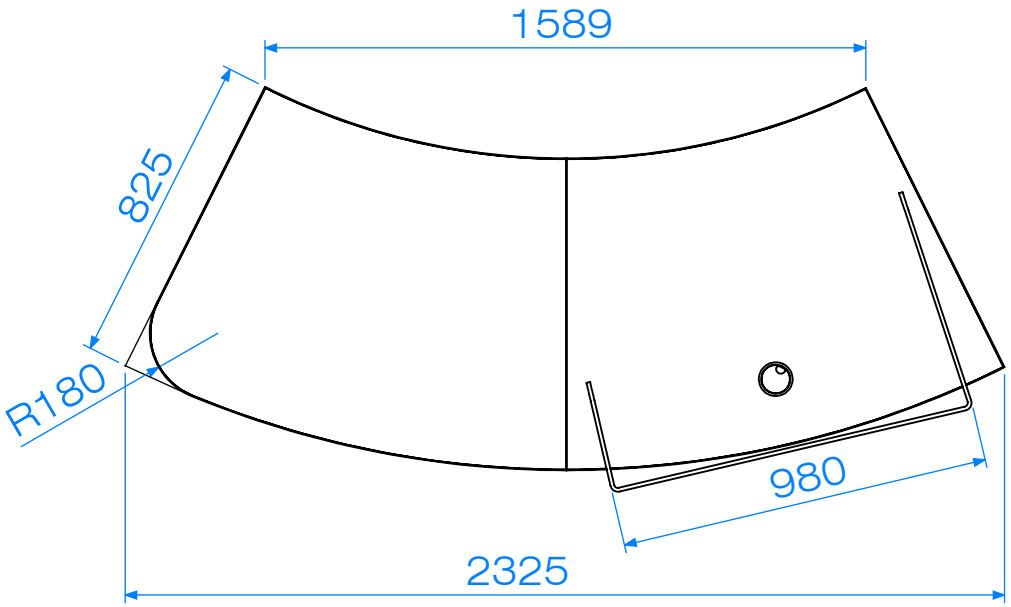

PLAN VIEW

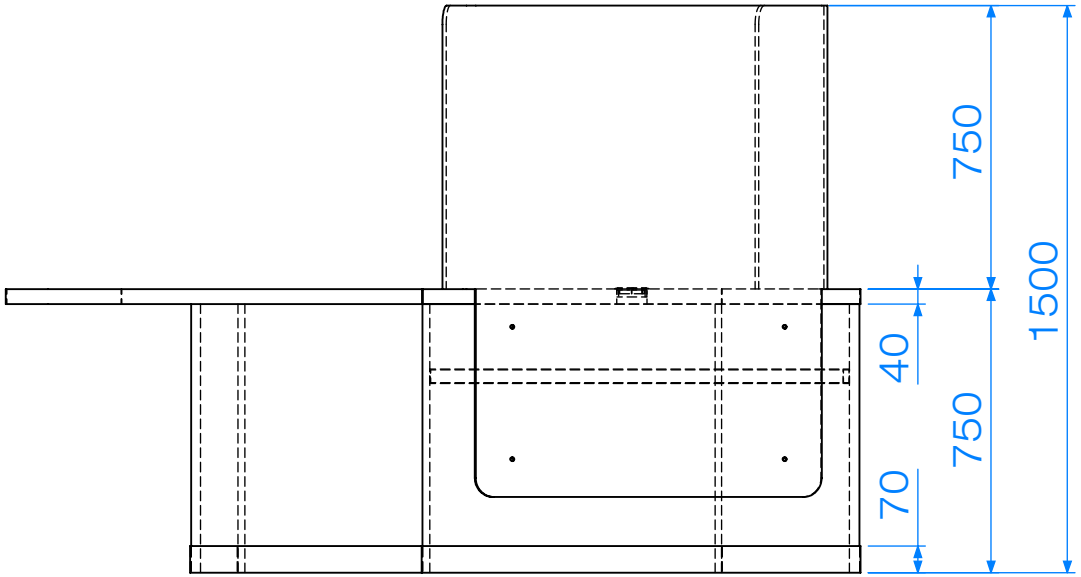

FRONT ELEVATION